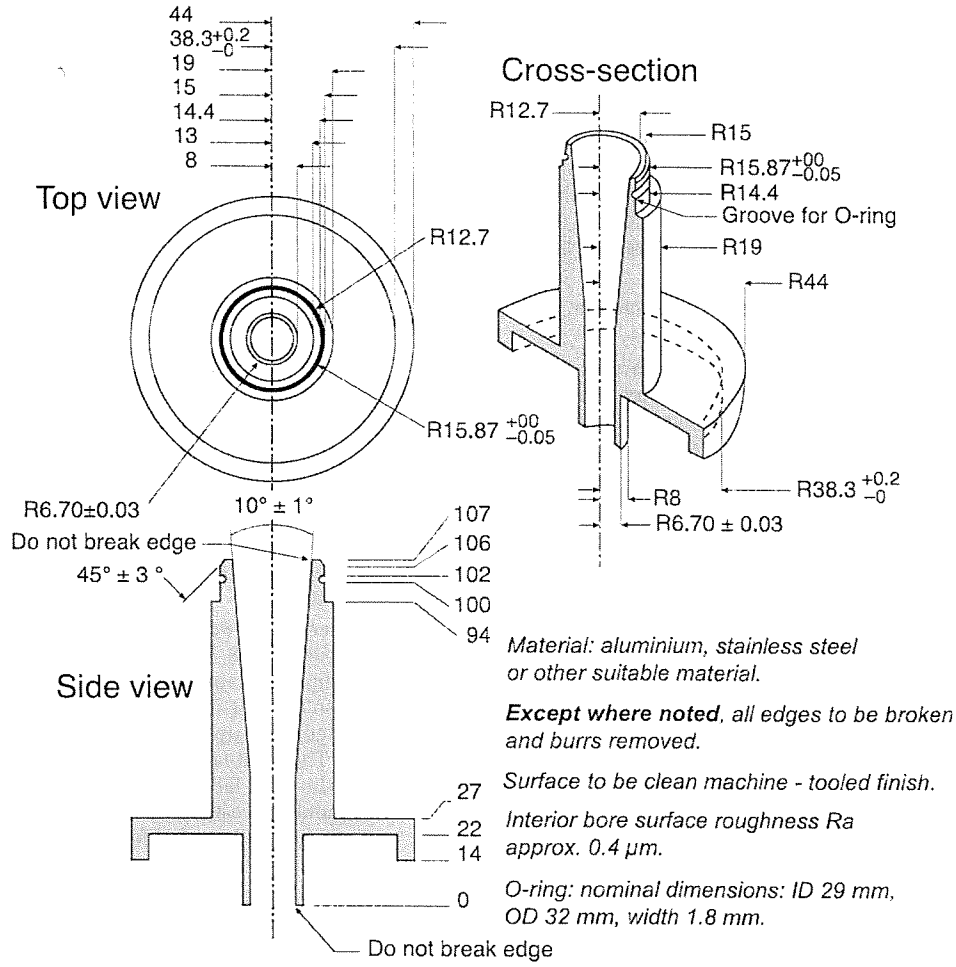

Figure 2.9.18.-10. – *Connection of the induction port to the preseparator of the Andersen cascade impactor Dimensions in millimetres unless otherwise stated*

Procedure for powder inhalers

The aerodynamic cut-off diameters of the individual stages of this apparatus are currently not well-established at flow rates other than 28.3 litres/min. Users must justify and validate the use of the impactor in the chosen conditions, when flow rates different from 28.3 litres/min are selected.

Assemble the Andersen impactor with the pre-separator and a suitable filter in place and ensure that the system is airtight. Depending on the product characteristics, the pre-separator may be omitted, where justified and authorised. Stages 6 and 7 may also be omitted at high flow rates, if justified. The pre-separator may be coated in the same way as the plates or may contain 10 ml of a suitable solvent. Connect the apparatus to a flow system according to the scheme specified in Figure 2.9.18.-8 and Table 2.9.18.-4.

Unless otherwise defined, conduct the test at the flow rate, Q_{out}, used in the test for uniformity of delivered dose drawing 4 litres of air from the mouthpiece of the inhaler and through the apparatus.

Connect a flowmeter to the induction port. Use a flowmeter calibrated for the volumetric flow leaving the meter, or calculate the volumetric flow leaving the meter (Q_{out}) using the ideal gas law. For a meter calibrated for the entering volumetric flow (Q_{in}), use the following expression:

$$Q_{out} = \frac{Q_{in} \times P_0}{P_0 - \Delta P}$$

P_0 = atmospheric pressure,

ΔP = pressure drop over the meter.

Adjust the flow control valve to achieve steady flow through the system at the required rate, Q_{out} (± 5 per cent). Ensure that critical flow occurs in the flow control valve by the procedure described for Apparatus C. Switch off the pump.

Prepare the powder inhaler for use according to the patient instructions. With the pump running and the 2-way solenoid valve closed, locate the mouthpiece of the inhaler in the mouthpiece adapter. Discharge the powder into the apparatus by opening the valve for the required time, T (± 5 per cent). Repeat the discharge sequence. The number of discharges should be minimised and typically would not be greater than 10. The number of discharges is sufficient to ensure an accurate and precise determination of fine particle dose.

Dismantle the apparatus. Carefully remove the filter and extract the active substance into an aliquot of the solvent. Remove the pre-separator, induction port and mouthpiece adapter from the apparatus and extract the active substance into an aliquot of the solvent. Extract the active substance from the inner walls and the collection plate of each of the stages of the apparatus into aliquots of solvent.

Using a suitable method of analysis, determine the quantity of active substance contained in each of the aliquots of solvent.

Calculate the fine particle dose (see Calculations).

APPARATUS E

Apparatus E is a cascade impactor with 7 stages and a micro-orifice collector (MOC). Over the flow rate range of 30 litres/min to 100 litres/min the 50 per cent-efficiency cut-off diameters (D_{50} values) range between 0.24 µm to 11.7 µm, evenly spaced on a logarithmic scale. In this flow range, there are always at least 5 stages with D_{50} values between 0.5 µm and 6.5 µm. The collection efficiency curves for each stage are sharp and minimise overlap between stages.

Material of construction may be aluminium, stainless steel or other suitable material.

The impactor configuration has removable impaction cups with all the cups in one plane (Figures 2.9.18.-11/14). There are 3 main sections to the impactor; the bottom frame that holds the impaction cups, the seal body that holds the jets and the lid that contains the interstage passageways (Figures 2.9.18.-11/12). Multiple nozzles are used at all but the first stage (Figure 2.9.18.-13). The flow passes through the impactor in a saw-tooth pattern.

Critical dimensions are provided in Table 2.9.18.-6.

In routine operation, the seal body and lid are held together as a single assembly. The impaction cups are accessible when this assembly is opened at the end of an inhaler test. The cups are held in a support tray, so that all cups can be removed from the impactor simultaneously by lifting out the tray.

An induction port with internal dimensions (relevant to the airflow path) defined in Figure 2.9.18.-7 connects to the impactor inlet. A pre-separator can be added when required, typically with powder inhalers, and connects between the induction port and the impactor. A suitable mouthpiece adapter is used to provide an airtight seal between the inhaler and the induction port.

Apparatus E contains a terminal Micro-Orifice Collector (MOC) that for most formulations will eliminate the need for a final filter as determined by method validation. The MOC is an impactor plate with nominally 4032 holes, each approximately 70 µm in diameter. Most particles not captured on stage 7 of the impactor will be captured on the cup surface below the MOC. For impactors operated at 60 litres/min, the MOC is capable of collecting 80 per cent of 0.14 µm particles. For formulations with a significant fraction of particles not captured by the MOC, there is an optional filter holder that can replace the MOC or be placed downstream of the MOC (a glass fibre filter is suitable).

Procedure for pressurised inhalers

Place cups into the apertures in the cup tray. Insert the cup tray into the bottom frame, and lower into place. Close the impactor lid with the seal body attached and operate the handle to lock the impactor together so that the system is airtight.

Connect an induction port with internal dimensions defined in Figure 2.9.18.-7 to the impactor inlet. Place a suitable mouthpiece adapter in position at the end of the induction port so that the mouthpiece end of the actuator, when inserted, lines up along the horizontal axis of the induction port. The front face of the inhaler mouthpiece must be flush with the front face of the induction port. When attached to the mouthpiece adapter, the inhaler is positioned in the same orientation as intended for use. Connect a suitable pump to

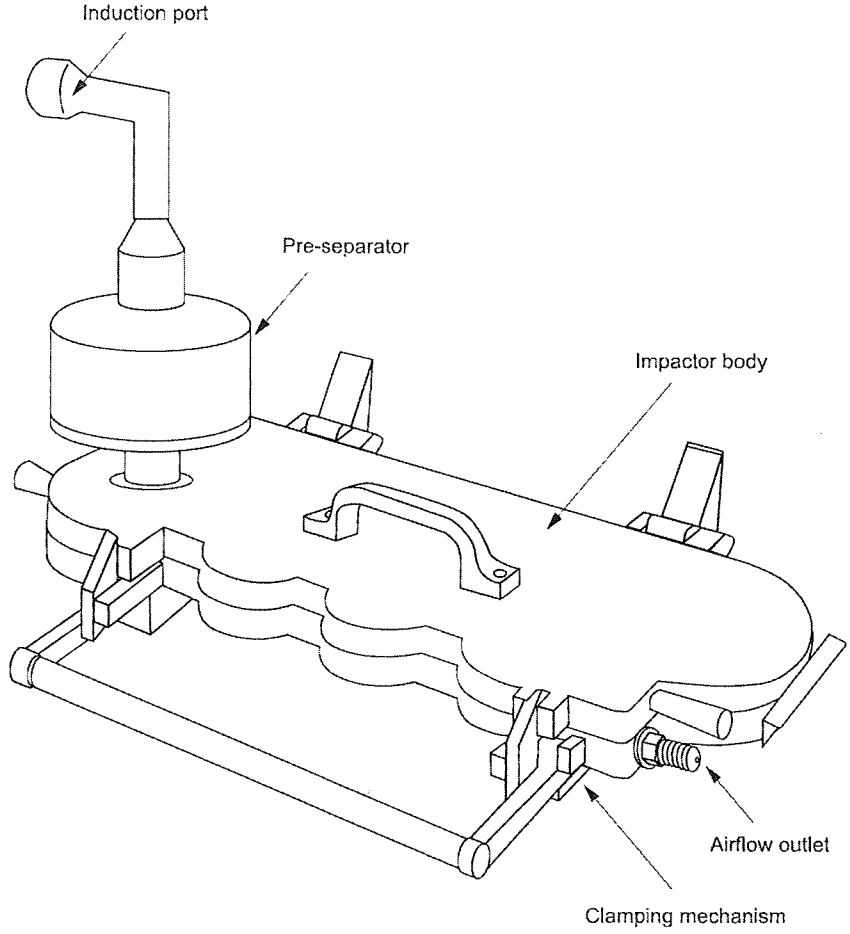

Figure 2.9.18.-11. - *Apparatus E (shown with the pre-separator in place)*

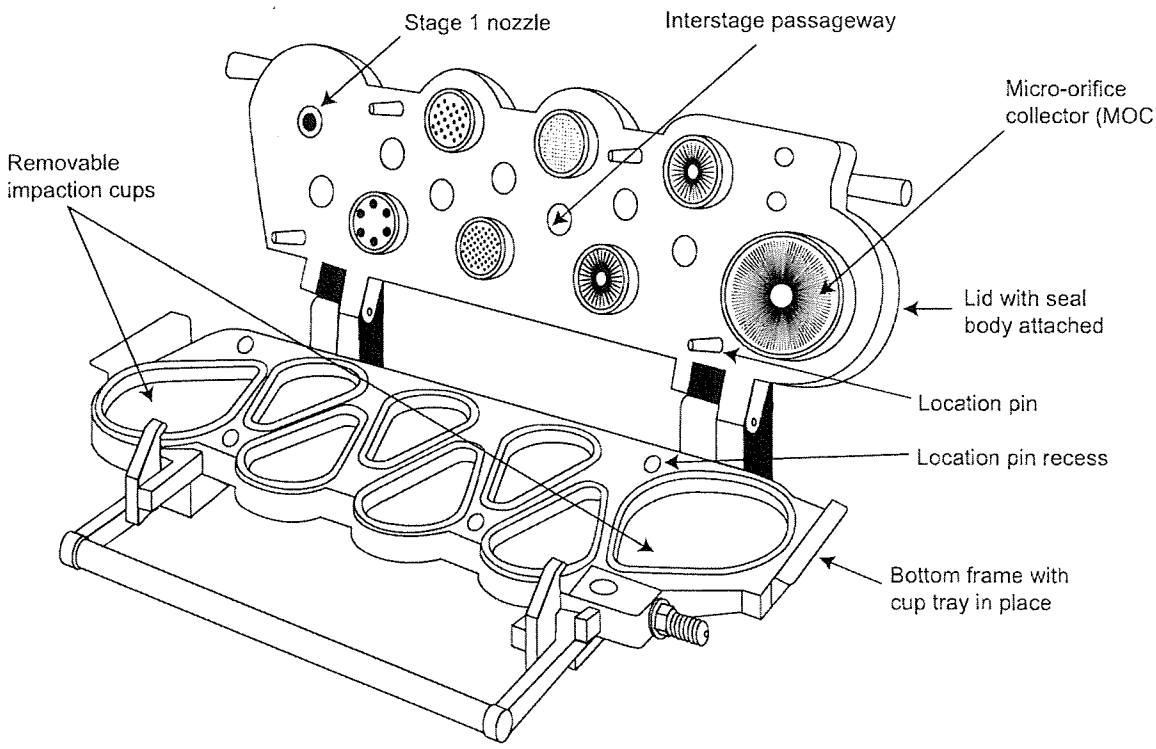

Figure 2.9.18.-12. – *Apparatus E showing component parts*

the outlet of the apparatus and adjust the air flow through the apparatus, as measured at the inlet to the induction port, to 30 litres/min (± 5 per cent). Switch off the pump.

Table 2.9.18.-6. – *Critical dimensions for apparatus E*

Description	Dimension (mm)
Pre-separator (dimension a - see Figure 2.9.18.-15)	12.8 ± 0.05
Stage 1* Nozzle diameter	14.3 ± 0.05
Stage 2* Nozzle diameter	4.88 ± 0.04
Stage 3* Nozzle diameter	2.185 ± 0.02
Stage 4* Nozzle diameter	1.207 ± 0.01
Stage 5* Nozzle diameter	0.608 ± 0.01
Stage 6* Nozzle diameter	0.323 ± 0.01
Stage 7* Nozzle diameter	0.206 ± 0.01
MOC*	approx. 0.070
Cup depth (dimension b - see Figure 2.9.18.-14)	14.625 ± 0.10
Collection cup surface roughness (Ra)	0.5 - 2 µm
Stage 1 nozzle to seal body distance** - dimension c	0 ± 1.18
Stage 2 nozzle to seal body distance** - dimension c	5.236 ± 0.736
Stage 3 nozzle to seal body distance** - dimension c	8.445 ± 0.410
Stage 4 nozzle to seal body distance** - dimension c	11.379 ± 0.237
Stage 5 nozzle to seal body distance** - dimension c	13.176 ± 0.341
Stage 6 nozzle to seal body distance** - dimension c	13.999 ± 0.071
Stage 7 nozzle to seal body distance** - dimension c	14.000 ± 0.071
MOC nozzle to seal body distance** - dimension c	14.429 to 14.571

* See Figure 2.9.18.-13
** See Figure 2.9.18.-14

Unless otherwise prescribed in the patient instructions, shake the inhaler for 5 s and discharge 1 delivery to waste. Switch on the pump to the apparatus. Prepare the inhaler for use according to the patient instructions, locate the mouthpiece end of the actuator in the adapter and discharge the inhaler into the apparatus, depressing the valve for a sufficient time to ensure a complete discharge. Wait for 5 s before removing the assembled inhaler from the adapter. Repeat the procedure. The number of discharges should be minimised, and typically would not be greater than 10. The number of discharges is sufficient to ensure an accurate and precise determination of the fine particle dose. After the final discharge, wait for 5 s and then switch off the pump.

Dismantle the apparatus and recover the active substance as follows: remove the induction port and mouthpiece adapter from the apparatus and recover the deposited active substance into an aliquot of solvent. Open the impactor by releasing the handle and lifting the lid. Remove the cup tray, with the collection cups, and recover the active substance in each cup into an aliquot of solvent.

Using a suitable method of analysis, determine the quantity of active substance contained in each of the aliquots of solvent.

Calculate the fine particle dose (see Calculations).

Procedure for powder inhalers

Assemble the apparatus with the pre-separator (Figure 2.9.18.-15). Depending on the product characteristics, the pre-separator may be omitted, where justified.

Place cups into the apertures in the cup tray. Insert the cup tray into the bottom frame, and lower into place. Close the impactor lid with the seal body attached and operate the handle to lock the impactor together so that the system is airtight.

When used, the pre-separator should be assembled as follows: assemble the pre-separator insert into the pre-separator base. Fit the pre-separator base to the impactor inlet. Add 15 ml

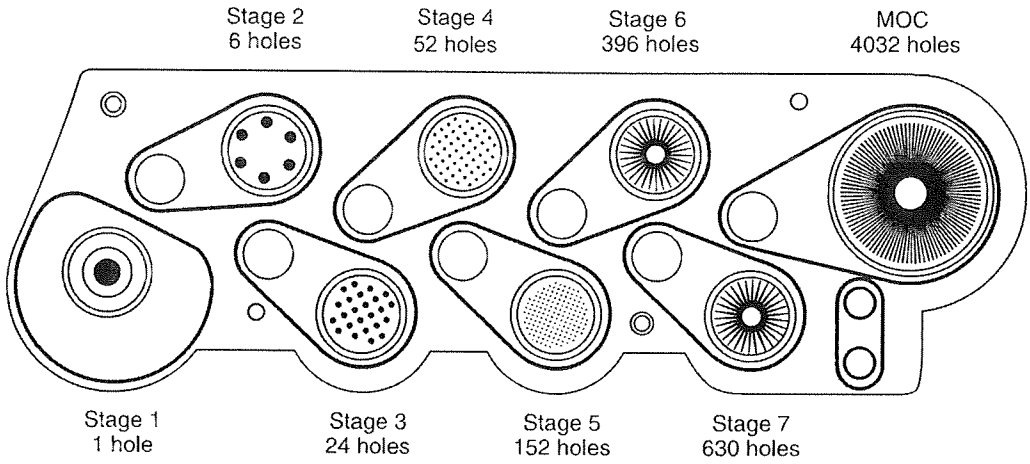

Figure 2.9.18.-13. – *Apparatus E: nozzle configuration*

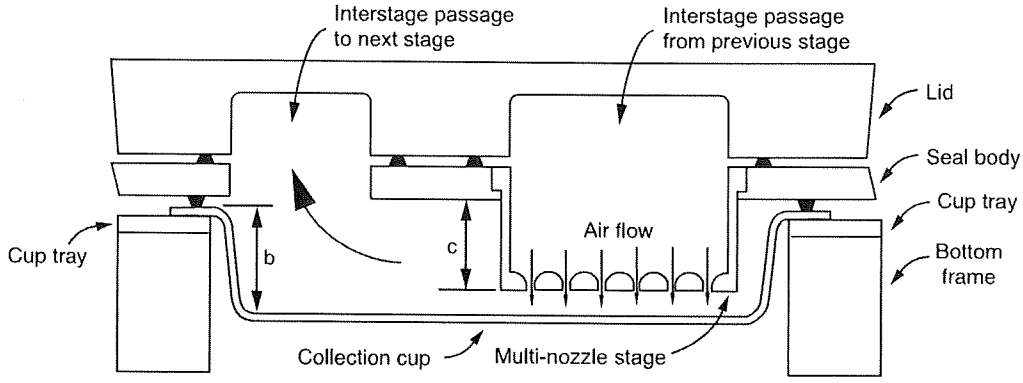

Figure 2.9.18.-14. – *Apparatus E: configuration of interstage passageways*

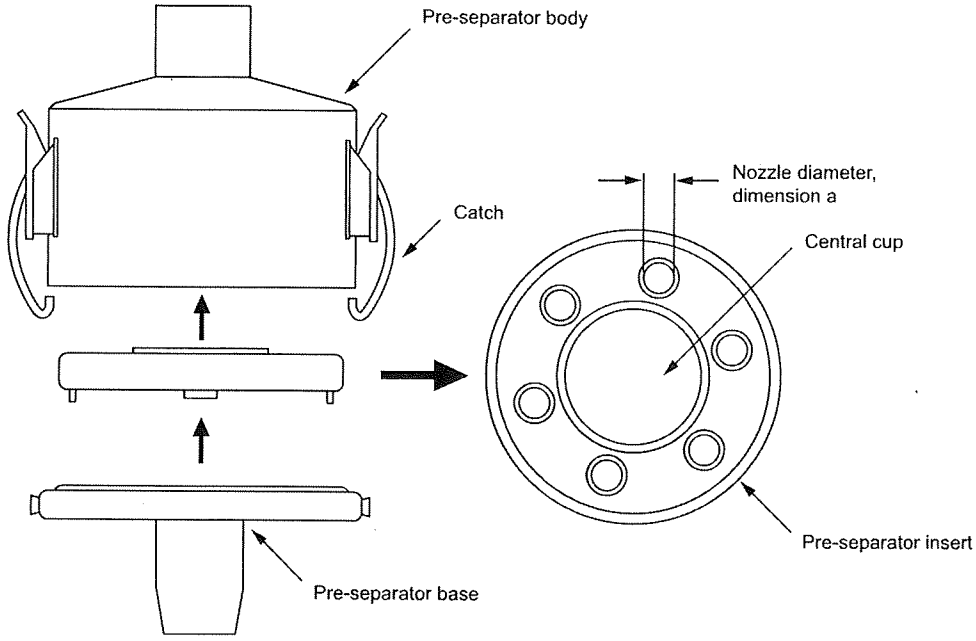

Figure 2.9.18.-15. – *Apparatus E: pre-separator configuration*

of the solvent used for sample recovery to the central cup of the pre-separator insert. Place the pre-separator body on top of this assembly and close the 2 catches.

Connect an induction port with internal dimensions defined in Figure 2.9.18.-7 to the impactor inlet or pre-separator inlet. Place a suitable mouthpiece adapter in position at the end of the induction port so that the mouthpiece end of the inhaler, when inserted, lines up along the horizontal axis of the induction port. The front face of the inhaler mouthpiece must be flush with the front face of the induction port. When attached to the mouthpiece adapter, the inhaler is positioned in the same orientation as intended for use. Connect the apparatus to a flow system according to the scheme specified in Figure 2.9.18.-8 and Table 2.9.18.-4.

Unless otherwise prescribed, conduct the test at the flow rate, Q_{out}, used in the test for uniformity of delivered dose drawing 4 litres of air from the mouthpiece of the inhaler and through the apparatus. Connect a flowmeter to the induction port. Use a flowmeter calibrated for the volumetric flow leaving the meter, or calculate the volumetric flow leaving the meter (Q_{out}) using the ideal gas law. For a meter calibrated for the entering volumetric flow (Q_{in}), use the following expression:

$$Q_{out} = \frac{Q_{in} \times P_0}{P_0 - \Delta P}$$

P_0 = atmospheric pressure,

ΔP = pressure drop over the meter.

Adjust the flow control valve to achieve steady flow through the system at the required rate, Q_{out} (± 5 per cent). Ensure that critical flow occurs in the flow control valve by the procedure described for Apparatus C. Switch off the pump.

Prepare the powder inhaler for use according to the patient instructions. With the pump running and the 2-way solenoid valve closed, locate the mouthpiece of the inhaler in the mouthpiece adapter. Discharge the powder into the apparatus by opening the valve for the required time, T (± 5 per cent). Repeat the discharge sequence. The number of discharges should be minimised and typically would not be greater than 10. The number of discharges is sufficient to ensure an accurate and precise determination of fine particle dose.

Dismantle the apparatus and recover the active substance as follows: remove the induction port and mouthpiece adapter from the pre-separator, when used, and recover the deposited active substance into an aliquot of solvent. When used, remove the pre-separator from the impactor, being careful to avoid spilling the cup liquid into the impactor. Recover the active substance from the pre-separator.

Open the impactor by releasing the handle and lifting the lid. Remove the cup tray, with the collection cups, and recover the active substance in each cup into an aliquot of solvent.

Using a suitable method of analysis, determine the quantity of active substance contained in each of the aliquots of solvent.

Calculate the fine particle dose (see Calculations).

CALCULATIONS

From the analysis of the solutions, calculate the mass of active substance deposited on each stage per discharge and the mass of active substance per discharge deposited in the induction port, mouthpiece adapter and when used, the pre-separator.

Starting at the final collection site (filter or MOC), derive a table of cumulative mass versus cut-off diameter of the respective stage (see Tables 2.9.18.-7 for Apparatus C, 2.9.18.-8 for Apparatus D, 2.9.18.-9 for Apparatus E). Calculate by interpolation the mass of the active substance less than 5 µm. This is the Fine Particle Dose (FPD).

If necessary, and where appropriate (e.g., where there is a log-normal distribution), plot the cumulative fraction of active substance versus cut-off diameter (see Tables 2.9.18.-7/9) on log probability paper, and use this plot to determine values for the Mass Median Aerodynamic Diameter (MMAD) and Geometric Standard Deviation (GSD) as appropriate. Appropriate computational methods may also be used.

Table 2.9.18.-7. – *Calculations for Apparatus C. Use* $q = \sqrt{(60/Q)}$, *where Q is the test flow rate in litres per minute* (Q_{out} *for powder inhalers)*

Cut-off diameter (µm)	Mass of active substance deposited per discharge	Cumulative mass of active substance deposited per discharge	Cumulative fraction of active substance (per cent)
$d_4 = 1.7 \times q$	mass from stage 5, m_5*	$c_4 = m_5$	$f_4 = (c_4/c) \times 100$
$d_3 = 3.1 \times q$	mass from stage 4, m_4	$c_3 = c_4 + m_4$	$f_3 = (c_3/c) \times 100$
$d_2 = 6.8 \times q$	mass from stage 3, m_3	$c_2 = c_3 + m_3$	$f_2 = (c_2/c) \times 100$
	mass from stage 2, m_2	$c = c_2 + m_2$	100

* Stage 5 is the filter stage

Table 2.9.18.-8. – *Calculations for Apparatus D when used at a flow rate of 28.3 litres/min*

Cut-off diameter (µm)	Mass of active substance deposited per discharge	Cumulative mass of active substance deposited per discharge	Cumulative fraction of active substance (per cent)
$d_7 = 0.4$	mass from stage 8, m_8	$c_7 = m_8$	$f_7 = (c_7/c) \times 100$
$d_6 = 0.7$	mass from stage 7, m_7	$c_6 = c_7 + m_7$	$f_6 = (c_6/c) \times 100$
$d_5 = 1.1$	mass from stage 6, m_6	$c_5 = c_6 + m_6$	$f_5 = (c_5/c) \times 100$
$d_4 = 2.1$	mass from stage 5, m_5	$c_4 = c_5 + m_5$	$f_4 = (c_4/c) \times 100$
$d_3 = 3.3$	mass from stage 4, m_4	$c_3 = c_4 + m_4$	$f_3 = (c_3/c) \times 100$
$d_2 = 4.7$	mass from stage 3, m_3	$c_2 = c_3 + m_3$	$f_2 = (c_2/c) \times 100$
$d_1 = 5.8$	mass from stage 2, m_2	$c_1 = c_2 + m_2$	$f_1 = (c_1/c) \times 100$
$d_0 = 9.0$	mass from stage 1, m_1	$c_0 = c_1 + m_1$	$f_0 = (c_0/c) \times 100$
	mass from stage 0, m_0	$c = c_0 + m_0$	100

Table 2.9.18.-9. – *Calculations for Apparatus E. Use $q = (60/Q)^x$, where Q is the test flow rate in litres per minute, and x is listed in the table*

Cut-off diameter (µm)	x	Mass of active substance deposited per discharge	Cumulative mass of active substance deposited per discharge	Cumulative fraction of active substance (per cent)
$d_7 = 0.34 \times q$	0.67	mass from MOC or terminal filter, m_8	$c_7 = m_8$	$F_7 = (c_7/c) \times 100$
$d_6 = 0.55 \times q$	0.60	mass from stage 7, m_7	$c_6 = c_7 + m_7$	$F_6 = (c_6/c) \times 100$
$d_5 = 0.94 \times q$	0.53	mass from stage 6, m_6	$c_5 = c_6 + m_6$	$F_5 = (c_5/c) \times 100$
$d_4 = 1.66 \times q$	0.47	mass from stage 5, m_5	$c_4 = c_5 + m_5$	$F_4 = (c_4/c) \times 100$
$d_3 = 2.82 \times q$	0.50	mass from stage 4, m_4	$c_3 = c_4 + m_4$	$F_3 = (c_3/c) \times 100$
$d_2 = 4.46 \times q$	0.52	mass from stage 3, m_3	$c_2 = c_3 + m_3$	$F_2 = (c_2/c) \times 100$
$d_1 = 8.06 \times q$	0.54	mass from stage 2, m_2	$c_1 = c_2 + m_2$	$F_1 = (c_1/c) \times 100$
		mass from stage 1, m_1	$c = c_1 + m_1$	100

01/2008:20919

2.9.19. PARTICULATE CONTAMINATION: SUB-VISIBLE PARTICLES

Particulate contamination of injections and infusions consists of extraneous, mobile undissolved particles, other than gas bubbles, unintentionally present in the solutions.

For the determination of particulate contamination 2 procedures, Method 1 (Light Obscuration Particle Count Test) and Method 2 (Microscopic Particle Count Test), are specified hereinafter. When examining injections and infusions for sub-visible particles, Method 1 is preferably applied. However, it may be necessary to test some preparations by the light obscuration particle count test followed by the microscopic particle count test to reach a conclusion on conformance to the requirements.

Not all parenteral preparations can be examined for sub-visible particles by one or both of these methods. When Method 1 is not applicable, e.g. in case of preparations having reduced clarity or increased viscosity, the test is carried out according to Method 2. Emulsions, colloids, and liposomal preparations are examples. Similarly, products that produce air or gas bubbles when drawn into the sensor may also require microscopic particle count testing. If the viscosity of the preparation to be tested is sufficiently high so as to preclude its examination by either test method, a quantitative dilution with an appropriate diluent may be made to decrease viscosity, as necessary, to allow the analysis to be performed.

The results obtained in examining a discrete unit or group of units for particulate contamination cannot be extrapolated with certainty to other units that remain untested. Thus, statistically sound sampling plans must be developed if valid inferences are to be drawn from observed data to characterise the level of particulate contamination in a large group of units.

METHOD 1. LIGHT OBSCURATION PARTICLE COUNT TEST

Use a suitable apparatus based on the principle of light blockage which allows an automatic determination of the size of particles and the number of particles according to size.

The apparatus is calibrated using suitable certified reference materials consisting of dispersions of spherical particles of known sizes between 10 µm and 25 µm. These standard particles are dispersed in *particle-free water R*. Care must be taken to avoid aggregation of particles during dispersion.

General precautions

The test is carried out under conditions limiting particulate contamination, preferably in a laminar-flow cabinet.

Very carefully wash the glassware and filtration equipment used, except for the membrane filters, with a warm detergent solution and rinse with abundant amounts of water to remove all traces of detergent. Immediately before use, rinse the equipment from top to bottom, outside and then inside, with *particle-free water R*.

Take care not to introduce air bubbles into the preparation to be examined, especially when fractions of the preparation are being transferred to the container in which the determination is to be carried out.

In order to check that the environment is suitable for the test, that the glassware is properly cleaned and that the water to be used is particle-free, the following test is carried out: determine the particulate contamination of 5 samples of *particle-free water R*, each of 5 ml, according to the method described below. If the number of particles of 10 µm or greater size exceeds 25 for the combined 25 ml, the precautions taken for the test are not sufficient. The preparatory steps must be repeated until the environment, glassware and water are suitable for the test.

Method

Mix the contents of the sample by slowly inverting the container 20 times successively. If necessary, cautiously remove the sealing closure. Clean the outer surfaces of the container opening using a jet of *particle-free water R* and remove the closure, avoiding any contamination of the contents. Eliminate gas bubbles by appropriate measures such as allowing to stand for 2 min or sonicating.

For large-volume parenterals, single units are tested. For small-volume parenterals less than 25 ml in volume, the contents of 10 or more units are combined in a cleaned container to obtain a volume of not less than 25 ml; where justified and authorised, the test solution may be prepared by mixing the contents of a suitable number of vials and diluting to 25 ml with *particle-free water R* or with an appropriate solvent without contamination of particles when *particle-free water R* is not suitable. Small-volume parenterals having a volume of 25 ml or more may be tested individually.

Powders for parenteral use are reconstituted with *particle-free water R* or with an appropriate solvent without contamination of particles when *particle-free water R* is not suitable.

The number of test specimens must be adequate to provide a statistically sound assessment. For large-volume parenterals or for small-volume parenterals having a volume of 25 ml or more, fewer than 10 units may be tested, based on an appropriate sampling plan.

The determination may be carried out with an apparatus (Figure 2.2.9.-1) having the specifications described in Table 2.2.9.-1[1]:

Table 2.2.9.-1

Size number	Nominal constant of viscometer	Kinematic viscosity range	Internal diameter of tube *R*	Volume of bulb *C*	Internal diameter of tube *N*
	$mm^2 \cdot s^{-2}$	$mm^2 \cdot s^{-1}$	mm (± 2 %)	ml (± 5 %)	mm
1	0.01	3.5 to 10	0.64	5.6	2.8 to 3.2
1A	0.03	6 to 30	0.84	5.6	2.8 to 3.2
2	0.1	20 to 100	1.15	5.6	2.8 to 3.2
2A	0.3	60 to 300	1.51	5.6	2.8 to 3.2
3	1.0	200 to 1000	2.06	5.6	3.7 to 4.3
3A	3.0	600 to 3000	2.74	5.6	4.6 to 5.4
4	10	2000 to 10 000	3.70	5.6	4.6 to 5.4
4A	30	6000 to 30 000	4.07	5.6	5.6 to 6.4
5	100	20 000 to 100 000	6.76	5.6	6.8 to 7.5

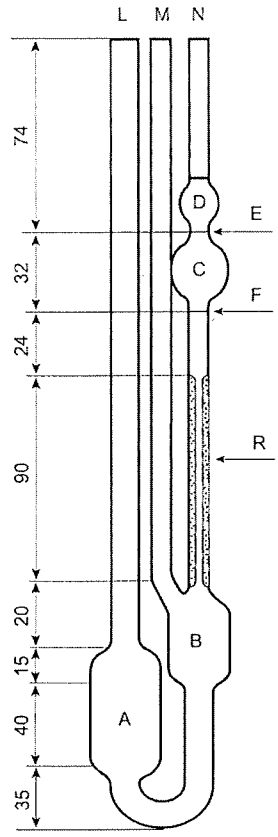

Figure 2.2.9.- 1. – *Suspended level viscometer*
Dimensions in millimetres

The minimum flow time should be 350 s for size no. 1 and 200 s for all other sizes.

Method. Fill the viscometer through tube (*L*) with a sufficient quantity of the liquid to be examined, previously brought to 20 °C unless otherwise prescribed, to fill bulb (*A*) but ensuring that the level of liquid in bulb (*B*) is below the exit to ventilation tube (*M*). Immerse the viscometer in the bath of water at 20 ± 0.1 °C, unless otherwise prescribed, maintain it in the upright position and allow to stand for not less than 30 min to allow the temperature to reach equilibrium. Close tube (*M*) and raise the level of the liquid in tube (*N*) up to a level about 8 mm above mark (*E*). Keep the liquid at this level by closing tube (*N*) and opening tube (*M*). Open tube (*N*) and measure, with a stop-watch to the nearest one-fifth of a second, the time required for the level of the liquid to drop from mark (*E*) to (*F*).

01/2008:20210

2.2.10. VISCOSITY - ROTATING VISCOMETER METHOD

The principle of the method is to measure the force acting on a rotor (torque) when it rotates at a constant angular velocity (rotational speed) in a liquid. Rotating viscometers are used for measuring the viscosity of Newtonian (shear-independent viscosity) or non-Newtonian liquids (shear dependent viscosity or apparent viscosity). Rotating viscometers can be divided in 2 groups, namely absolute and relative viscometers. In absolute viscometers the flow in the measuring geometry is well defined. The measurements result in absolute viscosity values, which can be compared with any other absolute values. In relative viscometers the flow in the measuring geometry is not defined. The measurements result in relative viscosity values, which cannot be compared with absolute values or other relative values if not determined by the same relative viscometer method.

Different measuring systems are available for given viscosity ranges as well as several rotational speeds.

APPARATUS

The following types of instruments are most common.

CONCENTRIC CYLINDER VISCOMETERS (ABSOLUTE VISCOMETERS)

In the concentric cylinder viscometer (coaxial double cylinder viscometer or simply coaxial cylinder viscometer), the viscosity is determined by placing the liquid in the gap between the inner cylinder and the outer cylinder. Viscosity measurement can be performed by rotating the inner cylinder (Searle type viscometer) or the outer cylinder (Couette type viscometer), as shown in Figures 2.2.10.-1 and 2.2.10.-2, respectively. For laminar flow, the viscosity (or apparent viscosity) η expressed in pascal-seconds is given by the following formula:

$$\eta = \frac{1}{\omega}\left(\frac{M}{4\pi h}\right)\left(\frac{1}{R_i^2} - \frac{1}{R_o^2}\right) = k\frac{M}{\omega}$$

M = torque in newton-metres acting on the cylinder surface,

ω = angular velocity in radians per second,

h = height of immersion in metres of the inner cylinder in the liquid medium,

R_i = radius in metres of the inner cylinder,

R_o = radius in metres of the outer cylinder,

k = constant of the apparatus, expressed in radians per cubic metre.

For non-Newtonian liquids it is indispensable to specify the shear stress (τ) or the shear rate (γ) at which the viscosity is measured. Under narrow gap conditions (conditions satisfied in absolute viscometers), there is a proportional relationship between M and τ and also between ω and γ:

$$\tau = AM \qquad \gamma = B\omega$$

where A and B are constants for the instrument and are calculated from the following expressions:

– *for concentric surface*:

$$A = \frac{1}{4\pi h}\frac{R_i^2 + R_0^2}{R_i^2 R_0^2} \qquad B = \frac{R_i^2 + R_0^2}{R_0^2 - R_i^2}$$

– *for cone-plates*:

$$A = \frac{3}{2\pi R^3} \qquad B = \frac{1}{\alpha}$$

M = torque in Newton-metres acting on the cone or cylinder surface,
ω = angular velocity in radians per second,
R_i = radius in metres of the inner cylinder,
R_0 = radius in metres of the outer cylinder,
R = radius in metres of the cone,
h = height of immersion in metres of the inner cylinder in the liquid medium,
α = angle in radians between the flat disk and the cone,
τ = shear stress in pascals (Pa),
γ = shear rate in reciprocal seconds (s^{-1}).

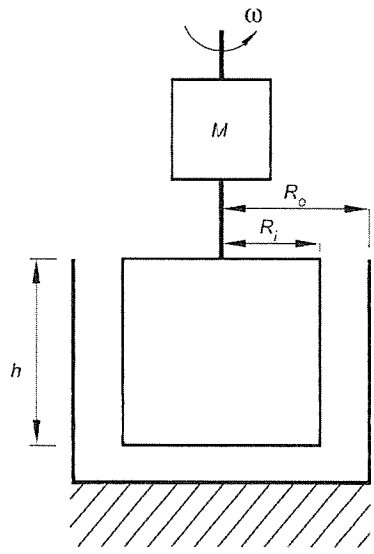

Figure 2.2.10.-1

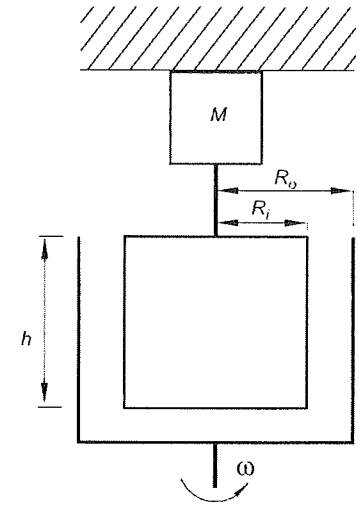

Figure 2.2.10.-2

CONE-PLATE VISCOMETERS (ABSOLUTE VISCOMETERS)

In the cone-plate viscometer, the liquid is introduced into the gap between a flat disc and a cone forming a define angle. Viscosity measurement can be performed by rotating the cone or the flat disc, as shown in Figures 2.2.10.-3 and 2.2.10.-4, respectively. For laminar flow, the viscosity (or apparent viscosity) η expressed in pascal-seconds is given by the following formula:

$$\eta = \left(\frac{M}{\omega}\right)\left(\frac{3\alpha}{2\pi R^3}\right) = k\frac{M}{\omega}$$

M = torque in Newton-metres acting on the flat disc or cone surface,
ω = angular velocity in radians per second,
α = angle in radians between the flat disc and the cone,
R = radius in metres of the cone,
k = constant of the apparatus, expressed in radians per cubic metre.

Constants A, B of the apparatus (see under concentric cylinder viscometers).

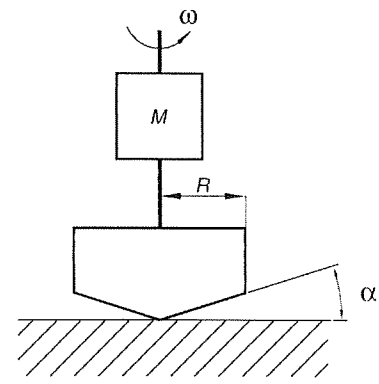

Figure 2.2.10.-3

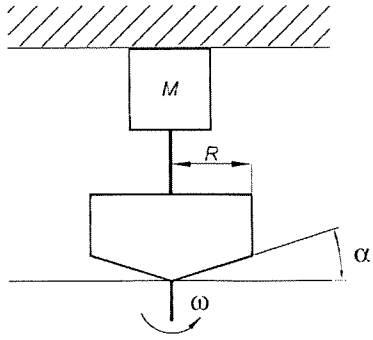

Figure 2.2.10.-4

SPINDLE VISCOMETERS (RELATIVE VISCOMETERS)

In the spindle viscometer, the viscosity is determined by rotating a spindle (for example, cylinder- or disc-shaped, as shown in Figures 2.2.10.-5 and 2.2.10.-6, respectively) immersed in the liquid. Relative values of viscosity (or apparent viscosity) can be directly calculated using conversion factors from the scale reading at a given rotational speed.

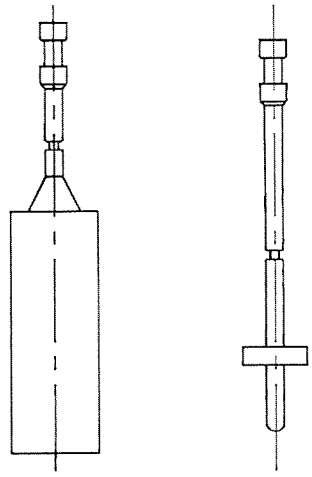

Figure 2.2.10.-5

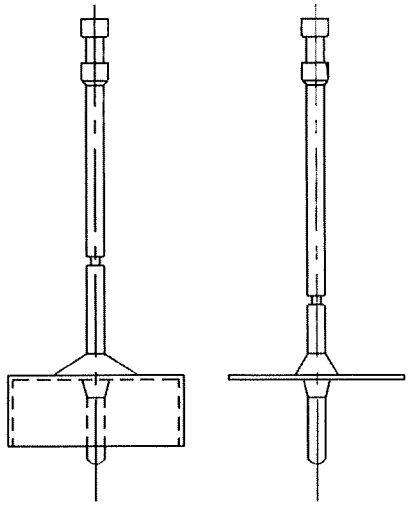

Figure 2.2.10.-6

In a general way, the constant k of the apparatus may be determined at various speeds of rotation using a certified viscometer calibration liquid. The viscosity η then corresponds to the formula:

$$\eta = k\frac{M}{\omega}$$

METHOD

Measure the viscosity (or apparent viscosity) according to the instructions for the operation of the rotating viscometer. The temperature for measuring the viscosity is indicated in the monograph. For non-Newtonian systems, the monograph indicates the type of viscometer to be used and if absolute viscometers are used the angular velocity or the shear rate at which the measurement is made. If it is impossible to obtain the indicated shear rate exactly, use a shear rate slightly higher and a shear rate slightly lower and interpolate.

With relative viscometers the shear rate is not the same throughout the sample and therefore it cannot be defined. Under these conditions, the viscosity of non-Newtonian liquids determined from the previous formula has a relative character, which depends on the type of spindle and the angular velocity as well as the dimensions of the sample container (Ø = minimum 80 mm) and the depth of immersion of the spindle. The values obtained are comparable only if the method is carried out under experimental conditions that are rigorously the same.

01/2008:20211

2.2.11. DISTILLATION RANGE

The distillation range is the temperature interval, corrected for a pressure of 101.3 kPa (760 Torr), within which a liquid, or a specified fraction of a liquid, distils in the following conditions.

Apparatus. The apparatus (see Figure 2.2.11.-1) consists of a distillation flask (*A*), a straight tube condenser (*B*) which fits on to the side arm of the flask and a plain-bend adaptor (*C*) attached to the end of the condenser. The lower end of the condenser may, alternatively, be bent to replace the adaptor. A thermometer is inserted in the neck of the flask so that the upper end of the mercury reservoir is 5 mm lower than the junction of the lower wall of the lateral tube. The thermometer is graduated at 0.2 °C intervals and the scale covers a range of about 50 °C. During the determination, the flask, including its neck, is protected from draughts by a suitable screen.

Method. Place in the flask (*A*) 50.0 ml of the liquid to be examined and a few pieces of porous material. Collect the distillate in a 50 ml cylinder graduated in 1 ml. Cooling by circulating water is essential for liquids distilling below 150 °C. Heat the flask so that boiling is rapidly achieved and note the temperature at which the first drop of distillate falls into the cylinder. Adjust the heating to give a regular rate of distillation of 2-3 ml/min and note the temperature when the whole or the prescribed fraction of the liquid, measured at 20 °C, has distilled.

２１年度　　厚生労働科学研究費補助金　分担研究報告書

国際調和された医薬品品質システムの導入・実践の国際調和に関する研究

分担研究者　国立医薬品食品衛生研究所薬品部第三室長　檜山　行雄

本分担研究ではＩＣＨ（医薬品規制国際調和会議）による Q8（製剤開発）、Q9（品質リスクマネジメント）及び Q10（医薬品品質システム）の３つのガイドラインの実施作業部会（Implementation Working Group：Q-IWG）の活動について報告する。

Q-IWG の活動目的は、Q8、Q9 及び Q10 の一貫した導入と実践を世界的に行うこと、及びこ三つのガイドラインの相乗効果により大きな成果を上げることにある。これらのガイドラインは、概念的であり、今後の方針に関わることが多く、なじみのない概念も含まれている。導入・実践に関しては今後注意深く、精密に作業を行っていかなければならないという認識がされ, 2007 年に、非公式 Q-IWG が開催された。その後、2010 年 3 月のパリ中間会議までに 5 回の Q-IWG 作業部会会議が行われた。

Q-IWG の検討課題としては、研究開発から生産までのライフサイクルを対象に、用語の共通理解、三つのガイドラインの相互関係の理解を進めること、申請資料の中にどの様に書き込むのかといった調和の程度も課題として取り上げる。Q8、Q9 及び Q10 の導入・実践を行った場合に、今まで作成された ICH の Quality ガイドラインに影響が及ぶことが考えられるので、それらを洗い出して対応していく。　さらに、コミュニケーションとトレーニングを、Q&A や教育資料の作成を通じおこなう。

Q-IWG の活動として、2010 年 10 月までに 40 を超える Q&A を発行した。　『Batch release という市場への出荷時の最終的な判断は、Real Time Release Testing を行うか、品質の試験、つまり規格の試験をするかに関わらず、GMP ルールの下で Batch release は行われる。』という原則を確認した。又、Q10 に定義されている知識管理は新しい概念ではなく、Q8、Q9 及び Q10 の発行に関わらず重要である。しかし Enhanced approach、Quality by Design、あるいは process analytical technology を採用した場合は、より複雑な内容を扱うため、より知識管理の重要度が上がると注意喚起している。さらに GMP 査察においては、製造プロセスと研究開発で得られた知識の関係に焦点が当てられる。このように、Q&A は複数の領域に渡る課題について、方針を明確にしつつ、解説を行っている。

Q&A は単独のガイドラインよりも明確に疑問に答えることができる。しかし、実際の状況は Q&A の発行だけでは、説明しきれないため、教育プログラムに期待がかかる。6 月の欧州におけるワークショップから、さらに教育プログラムへの要望が明確になると考える。　それらの要望に基づき、2010 年秋に開催が予定されている日本におけるワークショップも準備がなされねばならない。Q&A 及び教育資料作成を通じ、相乗的な国際調和の進展が期待される。

A　はじめに

本研究ではＩＣＨ（医薬品規制国際調和会議：参考１）による Q8（製剤開発）、Q9（品質リスクマネジメント）及び Q10（医薬品品質システム）の３つのガイドラインの実施作業部会（Implementation Working Group：Q-IWG）の活動について報告する。

Q-IWG の活動目的は、Q8、Q9 及び Q10 の一貫した導入と実践を世界的に行うこと、及び三つのガイドラインの相乗効果によって、より大きい成果を上げることにある。 2003 年の ICHGMP ワークショップにおいて合意されたビジョン（参考２）に基づき、製剤開発(Q8)、品質リスクマネジメント(Q9)、医薬品品質システム(Q10)が作成された。これらのガイドラインは、概念的であり、今後の方針に関わることが多く、またなじみのない概念も含まれている。2006 年の Quality Strategy Meeting では、Q8、Q9 及び Q10 の導入・実践に関しては今後注意深く、ある程度精密に作業を行っていかなければ ICH ビジョンの実現は難しいという認識がされ, 2007 年になり、非公式の Q-IWG が開催された。

その後、2010 年 3 月のパリ中間会議までに以下のように 5 回の Q-IWG 作業部会会議が行われた。

2007 年 11 月　非公式会議（横浜）
2008 年 6 月　　ポートランド会議
2008 年 11 月　ブラッセル会議
2009 年 6 月　横浜会議
2009 年 10 月　セントルイス会議
2010 年　3 月　中間会議（パリ）

Q-IWG の検討課題と運営

検討課題としては、研究開発から生産までのライフサイクルを対象に、用語の共通理解、Q8、Q9 及び Q10 のガイドラインの相互関係の理解を進めること、また、申請資料の中にどの様に書き込むのかといった調和の程度も課題として取り上げる。Q8、Q9 及び Q10 の導入・実践を行った場合に、今まで作成された ICH の Quality ガイドラインに影響が及ぶことが考えられるので、それらの課題を洗い出して対応していく。　さらに、Q8、Q9 及び Q10 ガイドラインに関するコミュニケーションとトレーニングを、Q&A や教育資料の作成を通じおこなう。外部団体と共同作業も行う。

Q-IWG の活動として、Quality by Design、知識管理、医薬品品質システム・査察の三つの領域についてどのような具体的な問題があるのかを洗い出す。IWG の成果物である、Q&A、White papers、Position papers や事例の作成、ワークショップの開催をする。さらに、ICH の web site を通して提案を受け付ける。

B　昨年度の進捗

2008 年のポートランド会議では、三領域に分け Brain Storming を行い、認識された課題について、知識管理は日本、Quality by Design はアメリカ、Pharmaceutical Quality System/Inspection は欧州がそれぞれ担当し、Q&A 案の作成を行なった。2008 年秋のブラッセルでは、分担作成した各領域の Q&A を持ち寄り、40 以上を仮採択した。続く、2009 年 3 月の電話会議において、30 件の Q&A を採択した。

C　今年度の　ICH　Q-IWG の進捗

2009 年 6 月横浜会議

横浜ではＱ＆Ａの作成、Case study のレビュー、教育プログラムの構築の三つの領域で議論が行われた。

Q&A については、10 件の Q&A が新たに採択された。

Case Studies を採択するため、外部論文を review して引用するには、多くの労力が必要となるためこれを断念した。それに代わり、IWG 自身が外部団体と共同で Position

Papers や White Papers を書くことになり、Task force を作り、今後取り組むこととなった。

トレーニングについては、Q8、Q9 及び Q10 の implementation を世界的に一貫して行うために Q-IWG 自身が作成した資料をもとに実施することとなった。Q8、Q9 及び Q10 と Q&A を取り込み、製品のライフサイクルに合わせ、全般にわたってトレーニング・プログラムを組む計画であり、対象は企業関係者だけではなく、行政の審査や監視の担当者を含めて行う予定である。講義を半日、分科会を 1 日、パネルディスカッションを半日ぐらいの正味 2 日の計画で、開催時期は、欧州は 2010 年春のブラッセル会議前に、日本では 2010 年秋の横浜会議前に、アメリカではその中間あたりで開催を予定することとなった。

横浜会議における作業部会から運営委員会への報告を添付したので参照されたい（添付資料１）。

2009 年 10 月セントルイス会議

横浜会議の後、セントルイス会議にむけ２回の電話会議が開催され、Ｑ＆Ａ作成、Case study レビュー、教育資料作成の進捗状況を確認しあった。

Ｑ＆Ａ作成の内、プロセスバリデーションに関しては前々回から整理が困難であったため、添付資料２のように意見を提出し調整を図った。

背景として

１　Q8R(2)パートＩの用語欄には『連続的工程モニターがプロセスバリデーションに代わる』という表現がある。これが『プロセスバリデーションに代わる新たな枠組みが今後できる』という誤解を引き起こす懸念があったこと

２　Q8 にある continuous process verification はＰＡＴなどによるモニターのことを指すのに対し、ＦＤＡのプロセスバリデーションガイダンス案には製品のライフサイクルの段階を示す continued process verification stage という言葉が使われ、一部で混乱が見られたこと：

があった。これらの背景を共有し、Q&A 1.1.2（添付資料３）として合意された。

トレーニングに用いる教育資料として厚生労働科学研究班の成果『サクラ錠』の事例（参考３）が開発シナリオとして採用されることが決まり、これを基に生産シナリオ、審査シナリオ、査察シナリオが作成されることとなった。セントルイス会議のまとめは添付資料４の報告を参照されたい。

2010 年 3 月パリ中間会議

本会議では、2010 年６月２日から４日にエストニア、タリン市で開催されることとなった欧州におけるトレーニングの詳細が決められた。

D 学会などにおける関連する議論

ICH 東京シンポジウム（2009 年 6 月 12 日）

Q-IWG 横浜会議直後に作業グループの概要、発行されたＱ＆Ａを例示しながら説明を行った。（誌上発表１，２、口頭発表１）日米欧それぞれにおける Q8-Q10 の導入状況、特に Enhanced approach を用いた申請・承認実績について質問が出され、アメリカの Pilot program, 欧州の PAT team 及び日本の厚生労働科学研究班の活動が紹介された。各極ではすでに Enhanced approach に基づく品目の承認があることが認識された。

日本ＰＤＡ製薬学会　ＩＣＨ　Ｑトリオに関する研修会（2009 年 12 月）

Ｑ８，Ｑ９，Ｑ１０ガイドラインの概説および Q-IWG の活動紹介を行った。医薬品品質システムにおける上級経営陣の責任の実際の会社組織への当てはめることに関する質問、又、原薬製造の開発・管理へのＱ８の概念の取り込みにいての質問が出された。（口頭発表２）

第九回医薬品品質フォーラムシンポジウム

『リアルタイムリリースの実現に向けて』（2010年1月）

リアルタイムリリースに関するＩＣＨガイドライン及びQ-IWG　Ｑ＆Ａによる論点を、利点、展開、技術的条件、運営上の原則に切り分け解説した。（口頭発表３）

米国の雑誌 Pharmaceutical Technology からは ICH の議論及び各極における導入の進捗の報告を依頼され、誌上発表３にあるように、日本における課題も含め報告をした。世界的に調和された導入に関心が高いことが分かる。

E 考察

Q&A を紹介し、その役割を考察する。 添付資料３、2.2.1 には Real Time Release Testing の採用により、バッチの出荷判断にどのような影響があるかという Q があり、その答えとして、『Batch release という市場への出荷時の最終的な判断では、Real Time Release Testing を行うか、品質の試験、つまり規格の試験をするかに関わらず、GMP 下で Batch release は行われる。』という原則が記述されている。Real Time Release Testing は、ICH の Q8(R1)に定義されている一方、現実の手順は生産の現場は GMP に沿って作業が行われる。すなわち、一つのガイドラインで規定したことが、他の領域の作業に少なからず影響を及ぼす。Q10 には、「製品、製造プロセス、および構成資材の情報を獲得、分析、保管、伝播するための体系的な取り組み」と知識管理の定義が収載されている。添付資料３、5.1 では、知識管理は新しい概念ではなく、Q8、Q9 及び Q10 の発に関わらず重要であるが、Enhanced approach、Quality by Design、あるいは process analytical technology を採用した場合の知識管理は、より複雑な内容を扱うので、より知識管理の重要度が上がると注意喚起している。又、添付資料３、4.1 では、GMP 査察において Enhanced approach、Quality by Design、あるいは process analytical technology を採用した場合の製造プロセスと研究開発で得られた知識の関係に焦点があてられると述べられている。このように、Q&A は複数の領域に渡る課題について、方針を明確にしつつ、解説を行っている。

Q&A は単独のガイドラインよりも明確に疑問に答えることができる。しかし、実際の状況はQ&Aの発行だけでは、説明しきれないため、教育プログラムに期待がかかる。6月の欧州におけるワークショップから、さらに教育への要望がはっきりするものと思われる。 それらの要望に基づき、2010 年秋に開催が予定されている日本におけるワークショップも準備がなされねばならない。

F まとめ

本報告では、2009 年４月から 2010 年３月までのＩＣＨの実施作業部会（Q-IWG）の Q&A 作成および教育ワークショップの準備活動について報告した。Q-IWG における、Q&A 及び教育資料作成を通じ、技術面のみならず行政面においても相乗的な国際調和の進展が期待される。

添付資料

1　横浜会議の運営委員会への報告

2　プロセスバリデーションについてのコメント

3　ICH Q-IWG による 2009 年 10 月現在の Q&A (http://www.ich.org/cache/compo/276-254-1.html)

4　セントルイス会議の運営委員会への報告

研究発表

誌上発表

1．Yukio Hiyama, Quality Topics Q-IWG* Quality Implementation Working Group,

Proceeding of ICH Public Meeting: ICH Japan Symposium 2009, 114-122 (2009)

２．檜山行雄、品質に関するトピックに動向、Q-IWG:品質実施作業部会、医薬品研究、40, 848-852 (2009)

3.Tsuyoshi Ando, Yukio Hiyama, Yoshihiro Matsuda, Tamiji Nakanishi, and Haruhiro Okuda, Pharmaceutical Technology, 33, 72 (2009)

口頭発表

１．Yukio Hiyama, Quality Topics Q-IWG: Quality Implementation Working Group, ICH Tokyo Symposium 2009

２．檜山行雄、"ICH Q8「製剤開発」, Q9「品質リスクマネジメント」, Q 10「医薬品品質システム」の背景など"、日本ＰＤＡ製薬学会教育コース「ICH Q トリオの内容解説」平成２１年１２月８日 KFC ホール　東京都墨田区

３．奥田晴宏、檜山行雄　ＩＣＨＱ８，Ｑ９，Ｑ１０におけるＲＴＲ、第九回医薬品品質フォーラムシンポジウム『リアルタイムリリースの実現に向けて』2010 年 1 月 8 日、ヤクルトホール、東京

参考文献

1. The International Conference on Harmonisation of Technical Requirements for Registration of Pharmaceuticals for Human Use (ICH)
http://www.ich.org/cache/compo/276-254-1.html
日米欧医薬品規制調和国際会議
http://www.pmda.go.jp/ich/ich_index.html

２．2003 年 ICH ビジョン：科学とリスクマネジメントに基づいた医薬品のライフサイクル（開発から市販後）全般に適用可能な調和された品質保証体系：A harmonised pharmaceutical quality system applicable across the lifecycle of the product emphasizing an integrated approach to risk management and science

３．平成 19 年、平成 20 年厚生労働科学研究分担研究報告書"原薬・製剤開発研究に基づいた製造・品質管理手法の研究―重要工程におけるデザインスペースの設定及び Control Strategy としての Real Time Release 等の研究"　檜山行雄

檜山資料1

IWG Q8, Q9, Q10 - Report to SC

Jean-Louis ROBERT, Ph.D.
EU - Rapporteur

Approaches to Address Implementation

Initial scope of Q-IWG

- Q&A
- Collaboration within ICH
- Collaboration with external organisation
- Briefing packages
- Workshops

SC-ICH Yokohama meeting, Nov 2007

Between Brussels and Yokohama

- Regional working groups involving observers established
  - US: Quality by Design topics
  - Japan: Knowledge Management
  - Europe: Pharmaceutical Quality Systems (PQS) / Quality Risk Management (QRM)
- 2 Q-IWG telecons: Q&A finalised
  - Q&A Version 1 approved by ICH-SC and published (April 09)
  - Inventory of external activities

Agenda for Yokohama

- **Additional Q&As**
- **Collaboration with external association on scientific articles**
- **Training issues / workshops**
- **Next steps**

Q&A discussed

	initial	adopted	open
For general clarification	**0**	**+ 1**	+ 1
Quality by Design (QbD) topics	**1**		
- Design Space	6	+ 2	
- Real Time Release Testing	8	+ 3	+ 3
- Control Strategy	3	+ 1	+ 1
Pharmaceutical Quality System	**6**	**+ 2**	+ 3
GMP Inspection practice	**2**		+ 3
Knowledge Management	**4**	**+ 1**	
Software solution	**1**		
Total	**41**	**+10** = 51	+11

June 2009 ICH Q-IWG, Yokohama 5

Seeking endorsement from ICH-SC for the Q&A

June 2009 ICH Q-IWG, Yokohama 6

Case Studies
(Articles / Position Papers)

- **Initial Goal**
  - Availability of illustrative examples and case studies relevant to harmonised and consistent implementation
    - By referencing existing material
    - By development of examples / position papers
- **What has been done between Brussels & Yokohama?**
  - Survey of conferences, publications, presentations etc.
  - Identified list of relevant topics and activities
  - Identified a few specific needs for additional work

June 2009 ICH Q-IWG, Yokohama 7

Case Studies
(Articles / Position Papers)

- **Q-IWG findings**
  - Many publications, workshops etc. available
  - Q-IWG will not endorse existing articles
    - Resource intensive: reviewing, decision, maintenance etc.
    - Potential regulatory concerns
  - Q-IWG will initiate, encourage and collaborate on paper development consistent with Q8, Q9, Q10 guidelines and Q&A

June 2009 ICH Q-IWG, Yokohama 8

Case Studies
(Articles / Position Papers)

- **How can this be achieved?**
  - Task force within Q-IWG
    - Identification of topics and potential collaborators
    - Establish process for outside contribution
    - Recommend the topic and potential collaborators to Q-IWG
  - Q-IWG to assign topic coordinator(s) among its members
  - Final endorsement by entire Q-IWG (e.g. by telecon)

Agreement of the ICH-SC to the proposal on

Case Studies
(Articles / Position Papers)

Training / Workshops
Goals and objectives

- Enhanced harmonised implementation training to industry and regulators at the three ICH regions
- Conducted by ICH experts, who developed the guidelines and members of the ICH Quality Implementation Working Group (Q-IWG)
- The only workshops endorsed by the ICH Q-IWG and conducted by the same faculty in all three ICH regions.
- The training will cover the integrated use of the ICH Q8, Q9 and Q10 guidelines and Q&A across the product life cycle, from development to manufacturing and commercialisation

June 2009 ICH Q-IWG, Yokohama 11

Training / Workshops
Goals and objectives

- Unlike other conferences and workshops on these topics, this training will present a case study throughout the entire life cycle from development to manufacturing and commercialisation
- Regulatory assessment and GMP inspection implementation aspects will be discussed

June 2009 ICH Q-IWG, Yokohama 12